CASE™
CANADA SECURITY

CSP-P49S EXT-63X

Explosion Proof Integrated PTZ Camera-Thermal



Intelligent Series

6 Years WARRANTY

24/7 Support

NDAA COMPLIANT

ATEX IEC IECEx CE ISO 9001 IP68

KEY FEATURES

·ATEX, IECEx Approved;
·Applicable for Gas Zone 1, Zone 2,
(Class II A, IIB, IIC, T1-T6 group)
Dust Zone 21, 22.
·Certified standards IEC/EN60079
·Stainless steel 304 or 316L enclosure
·Surface optional electro-polished or painting
·Weather Proof IP68(1.2m/45min)
·Wide voltage input: AC100-240V/
DC24V/AC24V/PoE++
·Symmetrical balancing design
·Strong tempered glass, fit for hydrofluoric acid area
·1/1.8" CMOS Sensor, Up to 4MP 2560x1440@
30fps ·Optical zoom: 63×, digital zoom 16×
·Min. illumination Color: 0.001Lux@F1.6
·Smart IR, IR Range: 300m
·Bulit-in Speaker, Wiper and Electronic Compass
·S+265/H.265/H.264/M-JPEG
·Monitoring/Intelligent Monitoring/ Face Capture
mode ·Auto-tracking Early Warning (AEW)
·Alarm 8 in and 2 out,Audio 1 in and 1 out
·Plugin Free

Email: sales@canadasecurity.com
Website: canadasecurity.com
US : +1 301 900 1000
CA : +1 289 800 9000

Application

The CSP-P49S EXT-63X is a classic explosion-proof integrated camera designed by CASE. It combines an explosion-proof camera housing, pan-tilt unit, decoder, and wiper into a single unit, making on-site installation and debugging much more convenient.
This explosion-proof camera is suitable for Zone 1 and Zone 2 hazardous areas where explosive mixtures of Group IIA, IIB, or IIC gases, vapors, and air may be present (T1 to T6), as well as Zone 21 and Zone 22 areas where explosive dust may exist. It is widely used in refining and chemical industries, oil extraction, gas production, fireworks manufacturing, grain production and storage, petrol stations, and similar environments.

SPECIFICATIONS

Camera	
Image Sensor	1/1.8" CMOS
Signal System	PAL/NTSC
Min. Illumination	Color: 0.001lux@ (F1.6, AGC ON), B/W:0.0001lux@ (F1.6, AGC ON), 0lux with IR
Shutter Time	1s to 1/100,000s
Day & Night	IR Cut Filter with Auto Switch
Optical Zoom	63X
Digital Zoom	16X
Lens	
Focal Length	5.7-359mm
Zoom Speed	<7s
Field of View	Horizontal filed of view: 60° (w)~1.54° (t) , Vertical filed of view: 35.5° (w)~0.87° (t), Diagonal field of view:67.5°(w)~1.77(t)
Aperture Range	F1.6~F5.0
Focus Control	Auto/Manual
Iris Control	Auto
Close Focus Distance	1 m–3 m
Pan&Tilt	
Pan Range	360°
Pan Speed	Pan Manual Speed: 0.1°~200°/s, Pan Preset Speed: 240°/s
Tilt Range	-21°~90° (Default -13°~90°)
Tilt Speed	Tilt Manual Speed: 0.1°~180°/s, Tilt Preset Speed: 180°/s
3D Position	Yes
Preset	500
Preset Accuracy	±0.1°
Cruise	16, up to 32 presets per cruise
Scan	8
Pattern	8, each with 600s memory or 1000 orders
Scheduled Task	Preset、Cruise、Scan、Pattern、Alarm output
Park Action	Yes
Power-off Memory	Yes
Preset Freezing	Yes
Illuminator	
IR LEDs	11
IR Distance	Up to 300m
IR Irradiation Angle	Adjustable by Zoom
White LEDs	2 support white/blue/red light flash
Compression Standard	
Video Compression	S+265/H.265/H.264 (High profile、Main profile、Baseline)
Video Bit Rate	32Kbps~16Mbps
Audio Compression	G.711A/G.711U/ADPCM_D/AAC_LC
Audio Sampling Rate	8K～48Kbps

Image	
Max. Resolution	4MP (2560x1440)
Main Stream	PAL: 25fps(2560x1440,2304x1296,1920x1080,1280x720) NTSC: 30fps(2560x1440,2304x1296,1920x1080,1280x720)
Sub Stream	PAL: 25fps(704x576,704x288,352x288,640x360) NTSC: 30fps(704X480,704X240,352X240,640x360)
Third Stream	PAL:25fps(704x576,704x288,352x288,640x480) NTSC: 30fps(704X480,704X240,352X240,640x480)
BLC	Yes
HLC	Yes
WDR	TWDR,,only in monitoring mode
Image Stabilization	EIS,only in monitoring mode
Fog	Digita
White Balance	Auto/Semi-auto/Manual/Sunny/Natural light/Warm light/Sodium lamp/Incandescent lamp/Locked white balance
AGC	Yes
Noise Reduction	2D/3D
ROI	7 Dynamic Areas for Both Main and Sub Stream, support 1 auto-tracking ROI
Picture Overlay	Yes
Privacy Mask	Yes
Smart Defog	Yes
Image Setting	Saturation, brightness, contrast, sharpness, adjustable by client software or web browser
Flip	Yes
OSD	16x16, 24x24,32x32, 48x48, 64x64,96x96, adaptable size, Letters such as Week, Date, Time, Total 5 Regions
Feature	
Alarm Trigger	Event Input, Event Output, Motion Detection, Mask Alarm, Disk Full, Disk R/W Error, IP Address Conflict, MAC Address Conflict, FTP Server Exception
Video Analytics	Tripwire, Double Tripwire, Perimeter, Object Abandon, Object Lost, Loitering, Running, Parking, Heatmap, Crowd, People Counting, On Duty Detection, Safety Helmet Detection,Video Abnormal, Audio Abnormal
Early Warning(EW)	Three level,Voice warning support 35 voice messages; Laser driven away; Three-light flash warning
Auto-Tracking	Yes
Face Detection and Analytics	
Operating Mode	Face capture, intelligent monitoring optional, default intelligent monitoring
Face Detection Performance	Detects up to 32 faces at the same scene
Face Exposure Brightness	Default 35, 1~100 brightness optional
Min. Face Pixel	Default 80, 19~2560 optional
Network	
Protocols	TCP/HTTPS/DHCP/DNS/DDNS/EasyDDNS/NTP/SMTP/UpnP/802.1X/QoS/IPv4/IPv6/UDP/PPPOE/SSL/SNMP/Unicast/Multicast
System Compatibility	ONVIF (PROFILE S/T/G/M),SDK,CGI,RTSP
ANR	Auto store video in SD card when NVR disconnected, and upload video to NVR when resumed connection (Only Support CASE ANR NVR)
Remote Connection	4
User/Host	Up to 32 users. 4 user levels
Web Version	web6
Interface	
Communication Interface	1 RJ45 10M/100M self adaptive Ethernet port
Audio I/O	1/1
Alarm I/O	8/2
Built-In Speaker	Yes
Reset Button	Yes
On-board storage	Built-in Micro SD card slot, up to 512 GB
RS-485	Yes
BNC	Yes(Debugging use)
Wiper	Yes
Electronic Compass	Yes
GPS/BDS	N/A

CASE™
CANADA SECURITY

Certification	
Standards	IEC/EN60079
ATEX Explosion proof marking	CE 2460 Ⅱ2G Ex db op is ⅡC T6 Gb, Ⅱ2D E tb i ⅢC T80 ºC Db
Mechanical	
Housing	Stainless steel 304 or 316L
Surface	Optional electro-polish or painting
Ingress protection	IP68（2m/2h）
Cable thread hole	M25×1.5 (or M27*1.25)
Ambient	
Ambient temperature	-40°～+60°/-50℃～+60℃
Air pressure	80Kpa to 110Kpa
Relative Humidity	≦95% (no condensation)
Thermal Camera	
Detector Type	Uncooled microbolometer FPA (Amorphous Silicon)
Resolution	640x480/17μm
Lens	6.6mm (only for iThermal-T 3) 9.6, 15, 19, 25mm. etc (fixed-foc us); 25mm, 35 mm,50mm. etc. (auto focus)
Pixel pitch	17μm
Response Band	8～14μm
Pseudo Chromatic	Black /white
Palette	11 kinds of color available (rust, rainbow, white/black, etc.),palette color customizable
Image mode	HDR (high dynamic range): Sea-sky mode, sky-earth mode
Image enhancement	IDE (image details enhancement)
Network protocol	TCP/IP,ICMP,HTTP,DHCP,DNS,RTP,RTSP,RTCP,IGMP,802. 1X ,ONVIF(Profile S)
Video compression standard	H.264
General	
Web Client Language	15 languages English / Spanish / Italian / Korean / Turkish / Russian / Thai / Polish / French / Dutch / Hebrew / Vietnamese / Arabic / German / Ukrainian
Power Supply	DC36V±25%/POE++(IEEE802.3 bt)
Power Consumption	37W (IR OFF), 62W (IR ON)
Size	510*295*410mm
Gross/Net Weight	38kg

Dimension

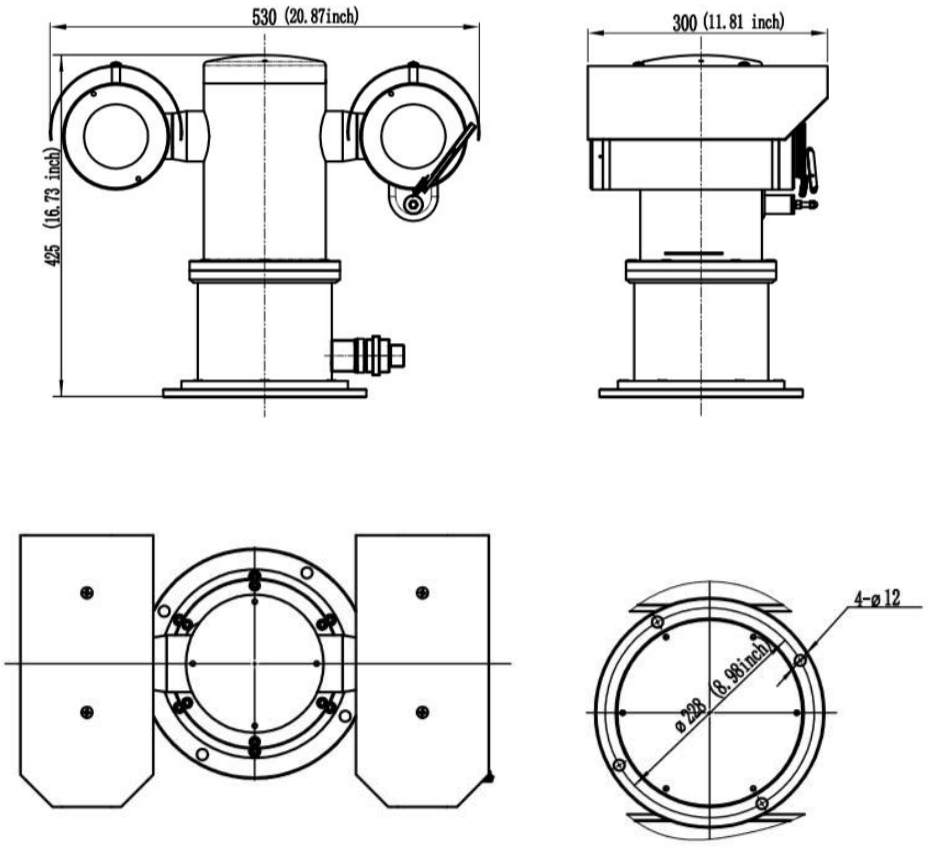

Relatives



CSP-110 EX



CSP-300 EX



CSP-600WB



CSP-FT EX



CSP-G EX



CSP-600CB



CSP-600PMB

Email: sales@canadasecurity.com
Website: canadasecurity.com
US : +1 301 900 1000
CA : +1 289 800 9000