CASE™
CANADA SECURITY

CSP-I8MS EX-I-2.7-13.5mm
8MP Explosion Proof-Motorized Dome Camera



Intelligent Series

6 Years WARRANTY

24/7 Support

NDAA COMPLIANT

IP66 IP68

Description

The ATEX- and IECEx-certified CSP-I8MS EX-I-2.7-13.5mm is a classic explosion-proof and corrosion-proof camera designed by CASE. It can accommodate a wide range of cameras and holds Group II explosion-proof and temperature class certifications.

This housing is suitable for use in Zone 1 and Zone 2 hazardous areas where explosive gas mixtures of Group IIA, IIB, and IIC (T1 to T6) may be present, as well as in Zone 21 and Zone 22 areas where combustible dust can occur. It is ideal for applications such as oil refineries, oil and gas extraction, chemical plants, petrol stations, and other similar high-risk industrial environments.

Email: sales@canadasecurity.com
Website: canadasecurity.com
US : +1 301 900 1000
CA : +1 289 800 9000

KEY FEATURES

- ATEX, IECEx certified
- Application: Gas zone 1 and zone 2; Dust zone 21 and zone 22
- Ex db II CT6 Gb/ Ex tD A21 IP68 T80℃
- Stainless steel 304/316L
- Optional electropolished or corrosion resistant paint finish
- Enclosure Protection: IP66, IP68 (2m, 2h)
- 8MP, Up to 3840×2160@30fps
- Motorized Lens 2.7-13.5mm
- S+265/H.265/H.264/M-JPEG
- Min. illumination Color: 0.003Lux@F1.6
- Smart IR, IR Range: 50m
- Support Video Analytics
- Support Human/Vehicle Classification
- Built-in Mic, audio I/O 1/1, alarm I/O 2/1
- Plugin Free
- Operating Conditions -40°C ~ 60°C / Less than 95% RH

SPECIFICATIONS

Camera	
Image Sensor	1/2.8" CMOS
Signal System	PAL/NTSC
Min. Illumination	Color: 0.003Lux@ (F1.6, AGC ON), B/W: 0Lux with IR
Shutter Time	1s to 1/100,000s
Day & Night	Dual IR Cut Filter with Auto Switch
Wide Dynamic Range	120dB
Angle Adjustment	pan 0~330°, tilt 0~75°, roate 0~350°
Lens	
Lens Type	Motorized
Focus	2.7-13.5mm
Lens Mount	Φ14
Aperture	F1.6~F3.3, Fixed
FOV	Horizontal field of view: 102.7°~29°
Illuminator	
IR LEDs	18
IR Range	Up to 50m
Wavelength	850nm
White/Warmlight LEDs	N/A
Compression Standard	
Video Compression	S+265/H.265/H.264/M-JPEG
Video Bit Rate	32Kbps~16Mbps
Audio Compression	G.711A/G.711U/ADPCM/AAC
Audio Bit Rate	8K~48Kbps
Image	
Max. Resolution	3840×2160
Main Stream	PAL: 25fps (3840×2160, 3072x2048), 25fps (2560×1440, 2304×1296, 1920×1080, 1280×720) NTSC: 30fps (3840×2160, 3072x2048), 30fps (2560×1440, 2304×1296, 1920×1080, 1280×720)
Sub Stream	PAL: 25fps (704×576, 704×288, 640×480, 352×288) NTSC: 30fps (704×480, 704×240, 640×480, 352×240)
Third Stream	PAL: 25fps(704×576, 704×288, 640×360, 352×288) NTSC: 30fps(704×480, 704×240, 640×360, 352×240)
Image Setting	Saturation, brightness, contrast, sharpness, adjustable by client software or web browser
Image Enhancement	BLC/3D DNR/HLC/Corridor Format

ROI	Support 8 fixed regions of coding
OSD	16×16, 24×24, 32×32, 48×48, 64x64, 96x96, adaptable size, Letters Such as Week, Date, Time, Total 8 Regions
Picture Overlay	Yes
Privacy Mask	Yes, 4 regions
Smart Defog	Yes
Network	
ANR	N/A
Protocols	TCP/IP, ICMP, HTTP, HTTPS, DHCP, DNS, DDNS, RTP, RTSP, RTCP, PPPoE, MULTICAST, UPnP, FTP, IPV4, NTP, SMTP, IGMP, 802.1x, QoS, IPV6, ARP, UDP, SNMP, SSL, Telnet, SNTP, RTMP, SFTP, NFS
System Compatibility	ONVIF (PROFILE S/T/G/M), SDK, Milestone, CGI, P2P
Remote Connection	≤7
Client	NetVideo / Video Sight
Web Version	Web6
Interface	
Communication Interface	1 RJ45 10M/ 100M self adaptive Ethernet port, RS 485
Audio	1/1, Mic in
Alarm	2/1
Reset Button	Yes
On-board storage	Built-in Micro SD card slot, up to 512 GB
Certification	
Certification	*ATEX, IECEx certified*
Explosion proof certification	DNV 21 ATEX 24764X IECEx DNV 21.0047X
ATEX Explosion proof marking	*Without optical fibre* *II 2 G Ex db IIC T6 Gb* *II 2 D Ex tb IIIC T80°C Db* *With optical fibre* *II 2 G Ex db op pr IIC T6 Gb* *II 2 D Ex tb op pr IIIC T80°C Db*
IECEx Explosion proof marking	*With optical fibre:* *Ex db op pr IIC T6 Gb* *Ex tb op pr IIIC T80°C Db Without optical fibre:* *Ex db IIC T6 Gb* *Ex tb IIIC T80°C Db*
Power	
Power Supply	DC12V±25%/PoE
Power Consumption	MAX: 7.5W (12V) MAX: 9W (PoE)
Environment	
Operating Conditions	-40°C ~ 60°C (-40°F ~ +140°F) / Less than 95% RH
Storage Temperature	-40°C ~ +60°C (-40°F to +140°F)
Ingress Protection	IP66, IP68 (2m, 2h)
Construction	
Casing	Stainless steel 304 or 316L Optional with corrosion proof painting
Product Dimensions	Φ144 (mm) x 245 (mm) (include ceiling mount)
Net Weight	6.4kg with ceiling mount bracket
Gross Weight	6.5kg with ceiling mount bracket

DIMENSIONS (Unit: mm)

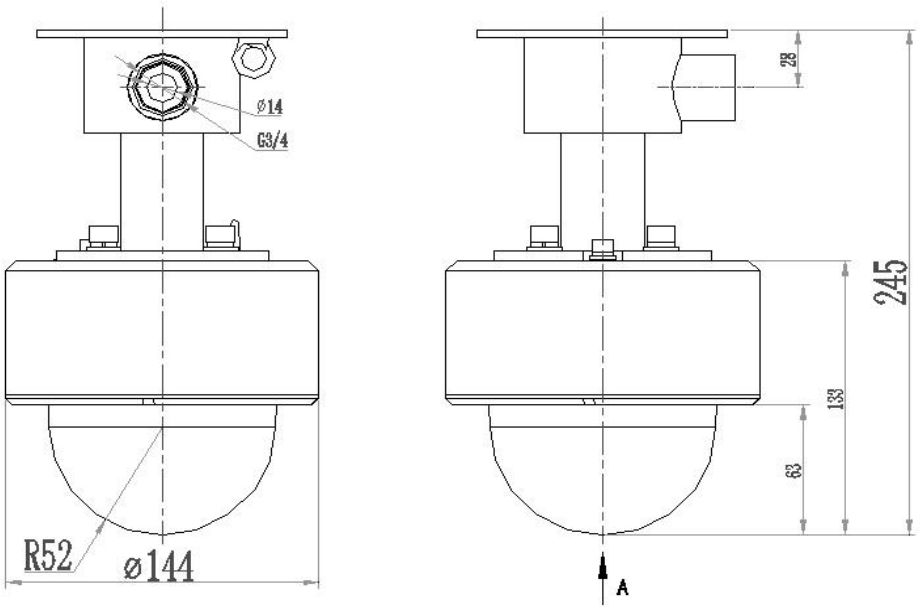



* Listed resolutions are only selectable options. It does not mean that all streams can work at their maximum resolution at the same time.

Email: sales@canadasecurity.com
Website: canadasecurity.com
US : +1 301 900 1000
CA : +1 289 800 9000