CASE™
CANADA SECURITY

CSP-I640 5R-IT35

Dual-Spectrum Bullet Camera

Intelligent Series



6 Years WARRANTY

24/7 Support

NDAA COMPLIANT

KEY FEATURES

·With the latest 12μm thermal imaging detector and advanced image algorithm, it can make farther and clearer images.
·Visible imaging and thermal imaging can meet the requirement for 24/7 security monitoring.
·Smart event analysis such as tripwire intrusion and area intrusion are available.
·Support professional temperature measurement analysis tools and smart fire detecting algorithm.
·Support multiple event linkage alarm and sound-light alarm.
·Integrated body design with encapsulation rating IP66.
·Support DC12V or PoE.
·Support ONVIF standard protocols, SDK and accompanying NVR and software are available.

Email: sales@canadasecurity.com
Website: canadasecurity.com
US : +1 301 900 1000
CA : +1 289 800 9000

CASE™
CANADA SECURITY

SPECIFICATIONS

Thermal	
Detector Type	VOx, uncooled FPA detectors
Spectral Range	8~14μm
NETD	≤40mK(@25°C,F#1.0,25Hz)
Max. Resolution	640×512
Pixel Pitch	12μm
Focal Length	35mm
Focus Type	Athermal fixed focus
FOV	12.5°×10 .0°
F#	1.0
IFOV	0.34mrad
Palette	20 palettes available such as Whitehot/Blackhot/Rainbow.
Visible Parameters	
Sensor	5MP 1/2.8" Progressive Scan CMOS
Max. Resolution	2560×1920
Focal Length	12mm
FOV	24°×18°
Day/Night Conversion	ICR auto conversion/ Electronic color to B/W
Filling Light	Infrared filling light, maximum filling distance 40m
Visible Parameters	
Dual-Spectrum Fusion	Support the thermal image to fuse visible image to improve image details
PIP	Support thermal image overlaid on visual image in PIP mode
Network functions	
Networ Protocol	IPv4,HTTP,HTTPS,QoS,FTP,SMTP,UPnP,SNMP,DNS,DDNS ,NTP,RTSP,RTCP,RTP,TCP,UDP,IGMP,ICMP,DHCP
Interoperability	ONVIF, GB28181, SDK
Number of Videos Previewed Simultaneously	Support up to 20 channels
User Management	Up to 20 users, two levels: administrator and user
Browser	Support IE and Chrome browser, Chinese and English are supported.
Video Parameters	
Max. Resolution	2560×1920(visible), 1280×1024(thermal)
Image Format	JPEG
Audio Compression Standard	G.711a/G .711Mu/AAC/ MPEG2-Layer2
Video Compression Standard	H.264/H.265
Main stream	Visible: 50Hz:25fps(2560×1920,2560×1440,1920×1080,1280×720) 60Hz:30fps(2560×1920,2560×1440,1920×1080,1280×720) Thermal: 50Hz:25fps(1280×1024,1024×768) 60Hz:30fps(1280×1024,1024×768)
Sub stream	Visible: 50Hz:25fps(704×576,352×288) 60Hz:30fps(704×480,352×240) Thermal: 50Hz:25fps(640×512)60Hz:30fps (640×512)

CASE™
CANADA SECURITY

Temperature Measurement	
Measuring Range	-20℃~+550℃
Measuring Accuracy	±2℃ or ±2% (The larger value shall prevail)
Temperature Analysis	Support full frame, spot, line, region temperature measurement rules and linkage alarms
Smart Functions	
Fire Warning	Support fire detection
Smart Video	Alarm trigger recording, disconnection trigger recording
Smart Alarming	Support triggering alarm and linkage alarm of network disconnection, IP address conflict, memory error, illegal access and burn alarm
Smart Detecting	Support event analysis functions such as area intrusion,tripwire intrusion, etc.
Voice Intercom	Support two-way voice intercom
Linkage Alarm	Video/image/mail/ alarm output / sound and light alarm
System Interfces	
Power Interface	DC 12V±25% / PoE(802.3at)
Communication Interface	1 RJ45 10M/100M adaptive Ethernet port
Audio Interface	1 channel audio input, 1 channel audio output
Alarm Interface	2-channel alarm input, 2-channel alarm output
Storage Interface	Micro SD memory (maximum 256G)
RS485	1 channel RS485
General Specefications	
Operating Temperature & Humidity	-40℃~+70℃; <95%RH
Protection grade	IP66
Power consumption	≤8W
Dimension(mm)	319.5×121.5×103.6mm
Weight	≤1.8kg
Effective Range	
Vehicle Detection Distance	4472m
Human Detection Distance	1458m
Vehicle Recognition Distance	1118m
Human Recognition Distance	365m
Vehicle Identification Distance	559m
Human Identification Distance	182m
Effective Range for Intelligent Analysis	
Target Recognition Distance (human)	273m
Target Recognition Distance (vehicle)	839m
Temperature Measurement (Target size:2mx2m)	972m
Temperature Measurement (Target size:1mx1m)	486m
Fire Detection (Target size:2mx2m)	3889m
Fire Detection (Target size:1mx1m)	1944m

DIMENSIONS:

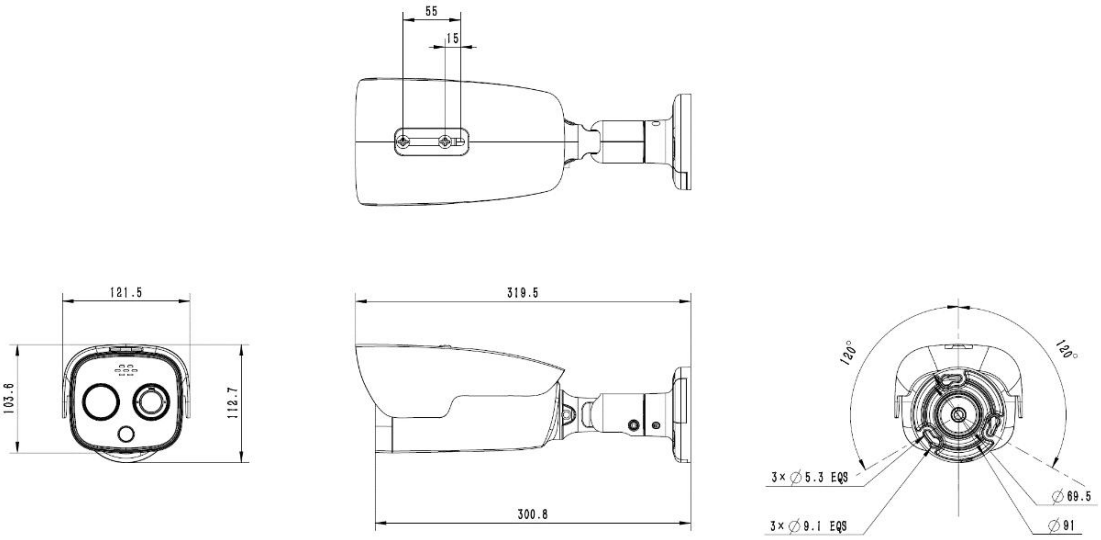

Email: sales@canadasecurity.com
Website: canadasecurity.com
US : +1 301 900 1000
CA : +1 289 800 9000