CASE™
CANADA SECURITY

CSP-G EX

ATEX Explosion Proof Glands

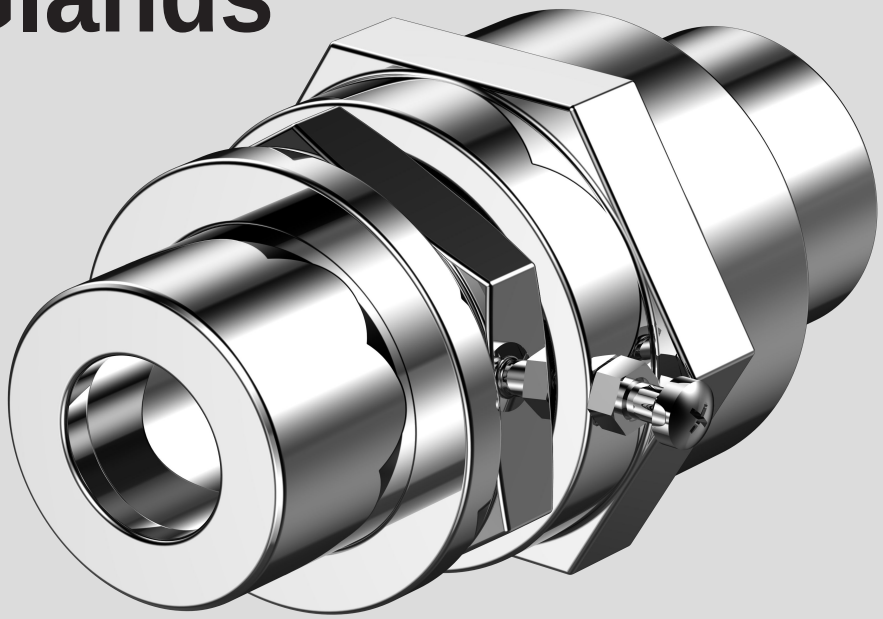

24/7 Support

KEY FEATURES

Explosion proof cable gland
· II 2G Ex db IIC Gb, II 2D Ex tb IIIC Db
· IP68

Email: sales@canadasecurity.com
Website: canadasecurity.com
US : +1 301 900 1000
CA : +1 289 800 9000

SPECIFICATIONS

Certificate	
Certificate Mark	CE 2460 Ⅱ2G Ex db ⅡC Gb, Ⅱ2D Ex tb ⅢC Db
Certificate No	CNEX 17 ATEX 0011 U Issue 0, IECEx CNEX 17.0013U
Standards	EN60079-0:2012+A11:2013、EN60079-1:2014、EN60079-31:2014
Mechanical	
Material	Stainless steel 304 or 316L
IP	IP68
Model	CSP-G EX-M27×1.25、CSP-G EX-M25×1.5、CSP-G EX-M32×1.25
Joint	M32×1.25 — G3/4 M27×1.25 — G3/4 M25×1.5 — G3/4
Ambient	
Ambient temperature	-45 to +100℃
Air pressure	80Kpa to 110Kpa
Relative Humidity	≦95% (no condensation), (+25℃)

Connection way:

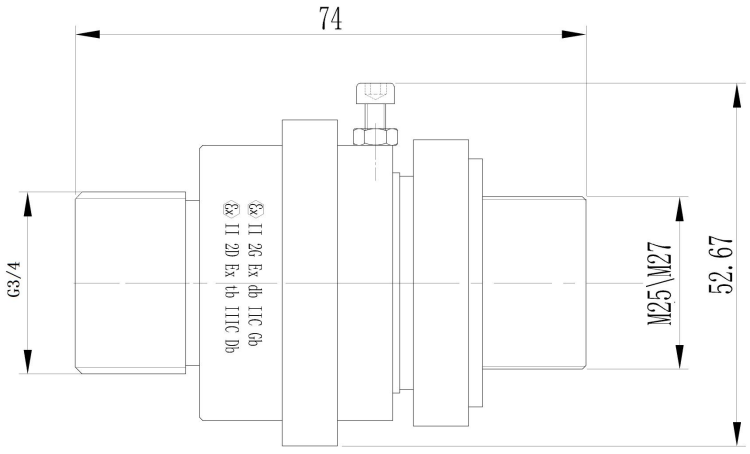

Email: sales@canadasecurity.com
Website: canadasecurity.com
US : +1 301 900 1000
CA : +1 289 800 9000