CASE™
CANADA SECURITY

CSP-600PMB
Pole Mount Adapter

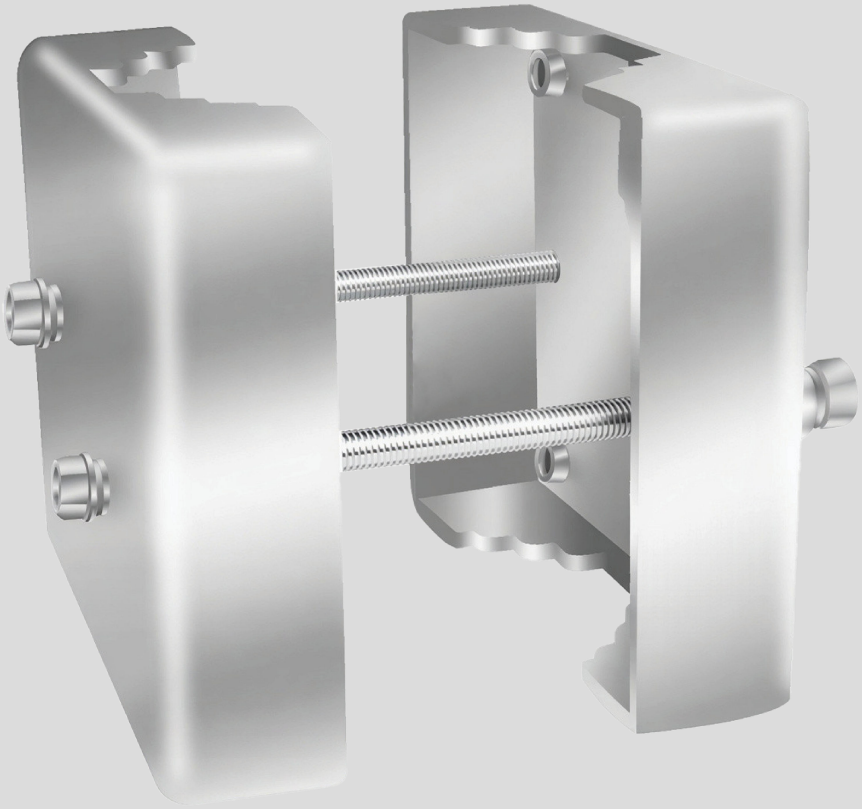

24/7 Support

Description

This stainless-steel CCTV bracket is designed for pole mounting of various CASE explosion-proof cameras. It is an ideal accessory when the camera needs to be installed on a pole to achieve the required monitoring angle.
Applicable models: CSP-HC EX-W, CSP-HC EX-A/W, CSP-I8PS EX I-2.7-13.5mm

- Indoor and outdoor installation
- Easy to install and maintain

Email: sales@canadasecurity.com
Website: canadasecurity.com
US : +1 301 900 1000
CA : +1 289 800 9000

SPECIFICATIONS

Main features	
Material	Stainless steel 304 or 316L
Maximum Loading	100Kg
General	
Material	Stainless steel 304 or 316L
Flexible Joint	Yes
Max Loading	100kg
Net Weight	6.6kg
Gross Weight	7.1kg
Overall dimension	280*182*202mm

Dimension:

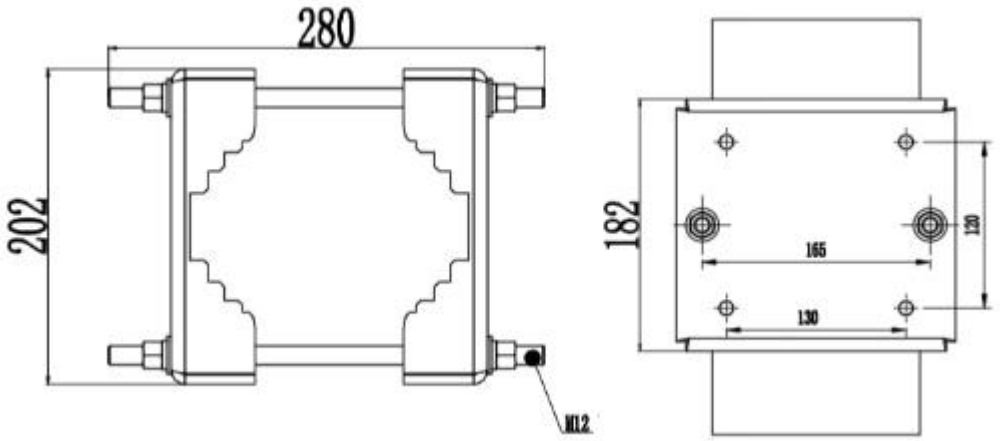

Email: sales@canadasecurity.com
Website: canadasecurity.com
US : +1 301 900 1000
CA : +1 289 800 9000