CASE™
CANADA SECURITY

CSP-300 EX
Explosion Proof Junction Box

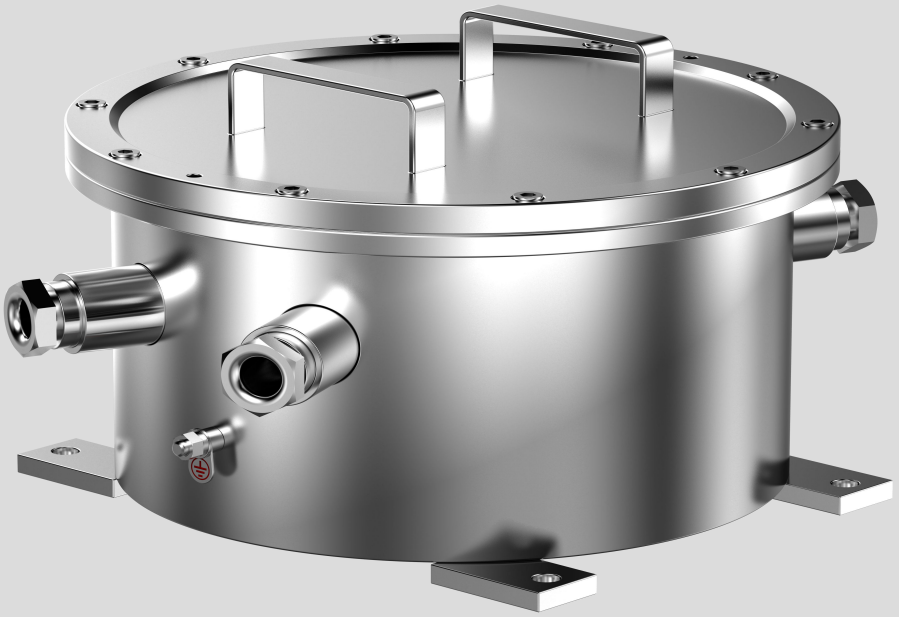

24/7 Support

KEY FEATURES

Explosion-proof junction box for cable threading in hazardous areas.
· Ex db IIC T6 Gb / Ex tb IIIC T80°C Db
· IP68

Email: sales@canadasecurity.com
Website: canadasecurity.com
US : +1 301 900 1000
CA : +1 289 800 9000

CASE™
CANADA SECURITY

SPECIFICATIONS

Certificate	
Certificate Mark	CE 2460 Ex II 2G Ex db IIC T6 Gb, II 2D Ex tb IIIC T80 °C Db
Certificate	Presafe 17 ATEX 11327X, IECEx PRE 18.0010X
Standards	IEC/EN60079
Mechanical	
Housing	Stainless steel 304 or 316L
IP	IP68
Cable thread hole	4pcs M25*1.5, M27*1.25
Ambient	
Ambient temperature	-40 to +60℃
Air pressure	80Kpa to 110Kpa
Relative Humidity	≦95% (no condensation, 25℃)
Optional equipment	
Power convert module	AC220V to 12V
Optical fiber receiver	Signal mode fiber
Surge protection	optional
General	
Fit zone	Gas zone 1, 2 (IIA, IIB, IIC, T1-T6); dust zone 21, 22
Overall size	413*397*183mm (L*W*H)
Inner usable size	230*230*120mm (L*W*H)
Net Weight	13.2kg

DIMENSIONS (Unit: mm)

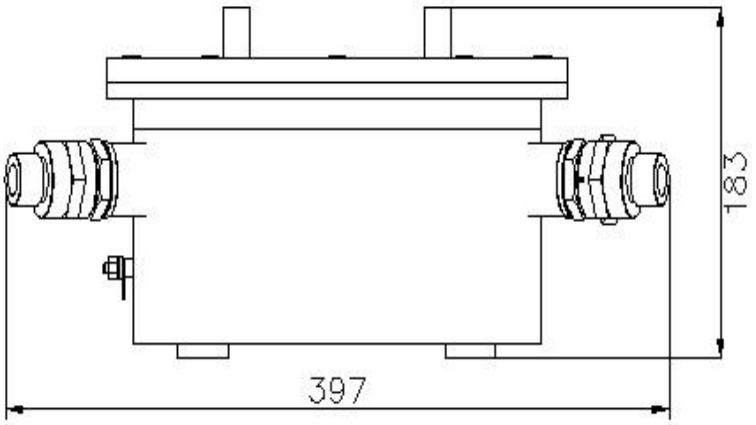

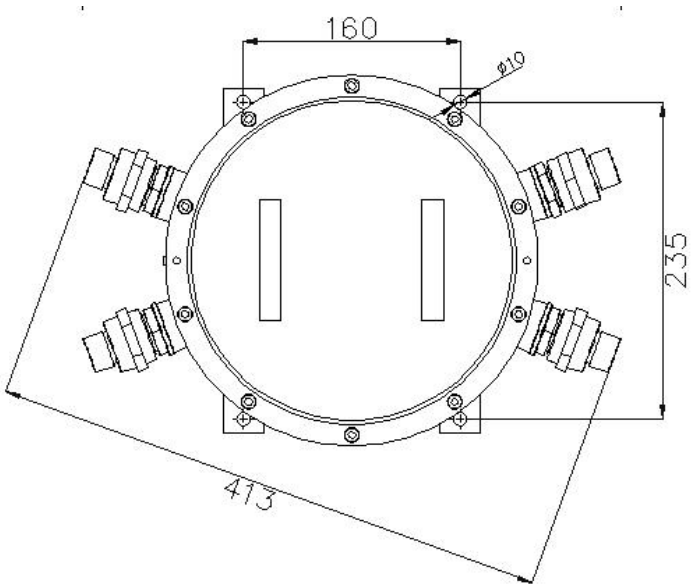

Email: sales@canadasecurity.com
Website: canadasecurity.com
US : +1 301 900 1000
CA : +1 289 800 9000