CASE™
CANADA SECURITY

CSP-110 EX
Explosion Proof Junction Box

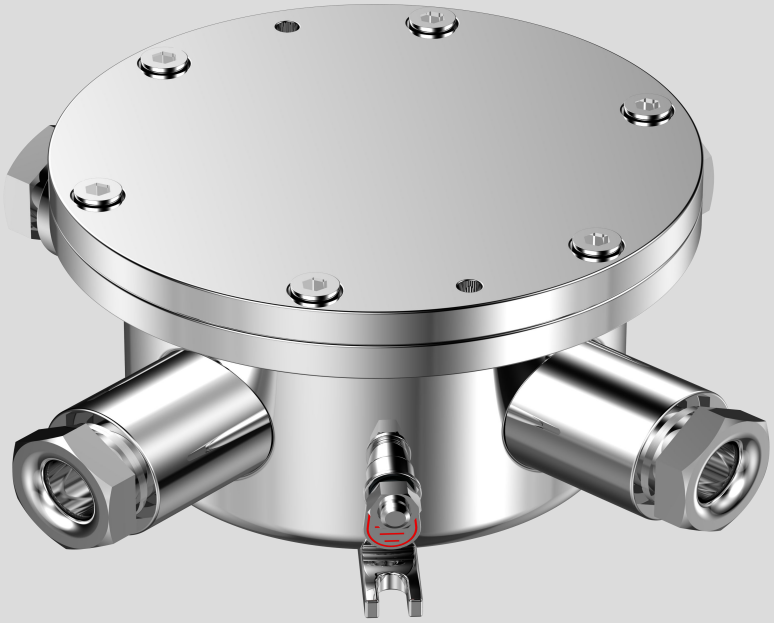

24/7 Support

IP68

KEY FEATURES

Explosion-proof junction box for cable threading in hazardous areas.
· Exd II CT6 Gb/ Ex tD A21 IP68 T80°C
· IP68

Email: sales@canadasecurity.com
Website: canadasecurity.com
US : +1 301 900 1000
CA : +1 289 800 9000

SPECIFICATIONS

Certificate	
Certificate Mark	Exd II CT6 Gb/ Ex tD A21 IP68 T80℃
Mechanical	
Housing	Stainless steel 304 or 316L
IP	IP68
Cable thread hole	4pcs G3/4 or NPT3/4
Electrical	
Voltage	AC85V～AC265V
Current	≦3A
Max connection port	20pcs terminal block
Ambient	
Ambient temperature	-25 to +60℃
Air pressure	80Kpa to 106Kpa
Relative Humidity	≦95% (no condensation)
General	
Overall size	Φ187*84mm
Inner Size	Φ100*75mm
Weight	3.5kg

DIMENSIONS (Unit: mm)

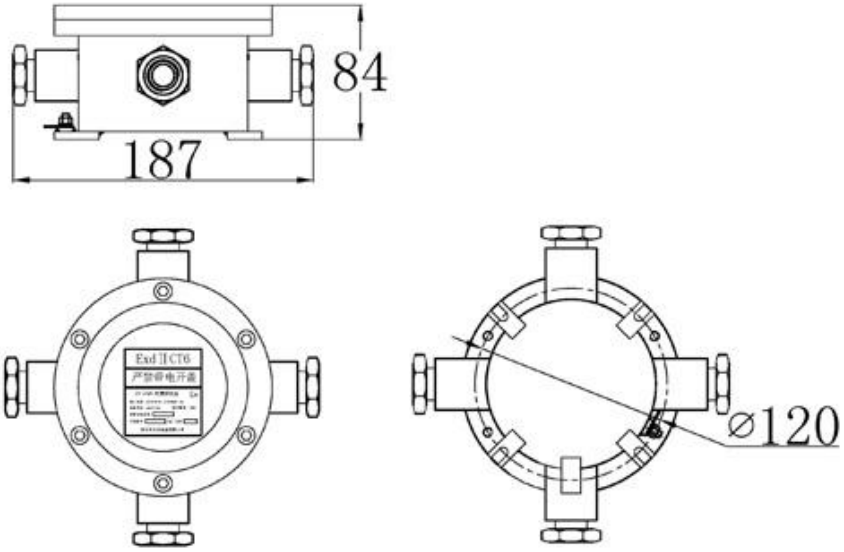

Email: sales@canadasecurity.com
Website: canadasecurity.com
US : +1 301 900 1000
CA : +1 289 800 9000