CASE™
CANADA SECURITY

CSP-100
Wall Bracket

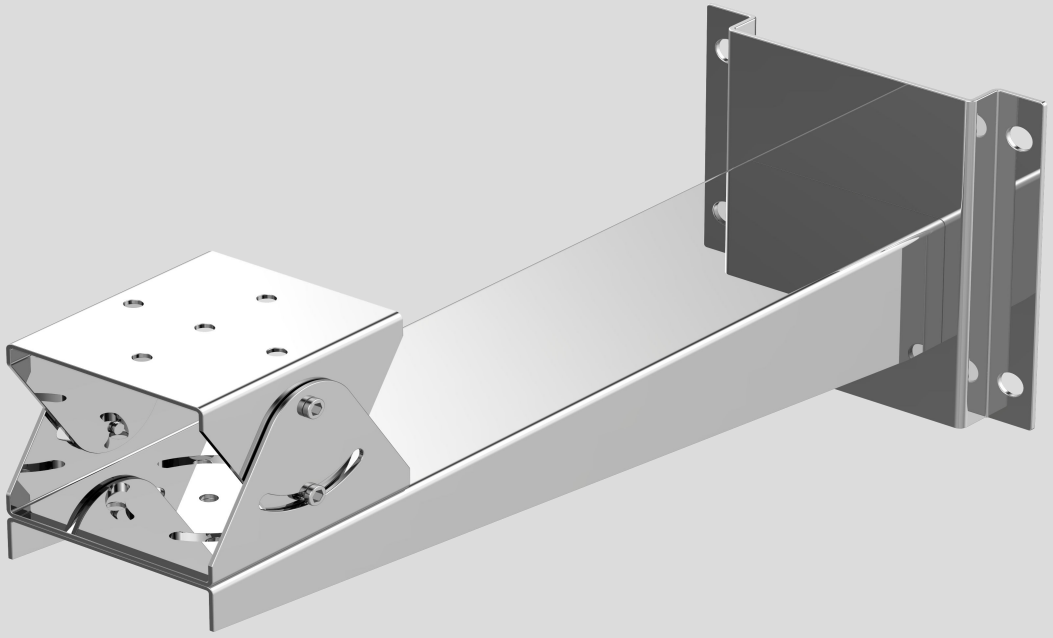

24/7 Support

Description

This stainless-steel bracket is designed for wall-mount installation of explosion-proof cameras. It can be directly mounted on any vertical load-bearing surface and supports up to 60 kg. The bracket is also suitable for poles and columns with diameters ranging from φ50 mm to φ150 mm.

Email: sales@canadasecurity.com
Website: canadasecurity.com
US : +1 301 900 1000
CA : +1 289 800 9000

SPECIFICATIONS

General	
Material	Stainless steel 304 or 316L
Flexible Joint	Yes
Max Loading	60kg
Weight	19.94kg



DIMENSIONS (Unit: mm)

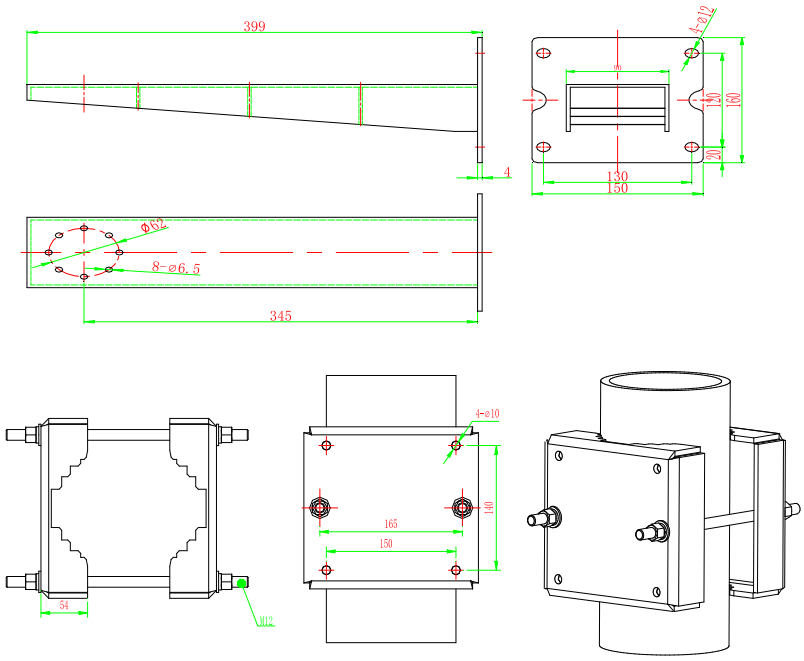

Email: sales@canadasecurity.com
Website: canadasecurity.com
US : +1 301 900 1000
CA : +1 289 800 9000