CASE™
CANADA SECURITY

CS-GS90M

Face Recognition Turnstile -- Swing



2 Year WARRANTY

24/7 Support

Gate (Middle)

Email: sales@canadasecurity.com
Website: canadasecurity.com
US : +1 301 900 1000
CA : +1 289 800 9000

Product Features:

- Supercapacitor technology for worry-free power-off response, with an innovative built-in supercapacitor;
- Dual anti-pinch design to safeguard passage safety;
- Brushless drive for precise and smooth operation;
- Unique anti-condensation treatment; special protective treatment around the unit greatly reduces condensation;
- Sliding rail design reduces installation difficulty and makes maintenance simpler, improving service life and lowering repair costs;
- Integrated wiring harness makes maintenance easier; if a problem occurs, the fault point can be located more quickly and easily, reducing troubleshooting time;
- Only authorized personnel can pass; unauthorized persons are denied access;
- Intelligent passage modes adapt to changing scenarios: smooth passage, memory function, and one-card-per-person freely switchable;
- Flexible configuration of passage states (controlled, free passage, no passage) for entry and exit directions;
- Auto-reset function: if no passage occurs within the set time after the gate opens, the system automatically cancels the user's passage permission; passage time is configurable;
- Voice alarm on illegal intrusion;
- In case of power failure, the swing arms open automatically, keeping the lane clear so people can pass freely, preventing panic;

Technical Specifications:

Product Dimensions	L 1200 mm x W 150 mm x H 980 mm
Swing Arm	Acrylic swing arm, stainless steel swing arm
Drive Motor	Brushless motor
Mechanism Lifespan	More than 5 million cycles (internal test data)
Running Speed	Normally closed mode ≤35 times/min; normally open mode ≤45 times/min
Face Terminal Mounting Hole	Face terminal mounting hole plug included as standard
Lane Width	Standard lane 600 mm; supports 600 mm - 950 mm
Input Interface	Relay switch signal / RS-485 communication signal
Power Supply Voltage	AC100~240V / 50HZ±10%
Operating Temperature	-30-70℃
Infrared Beam Sensors	4 pairs
Gate Opening/Closing Speed	0.5-60 s (adjustable)

Product Dimensions:

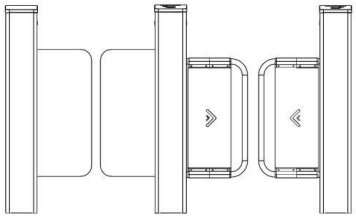

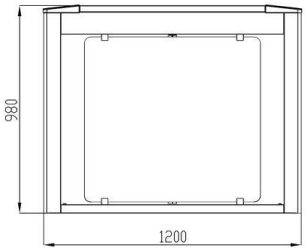

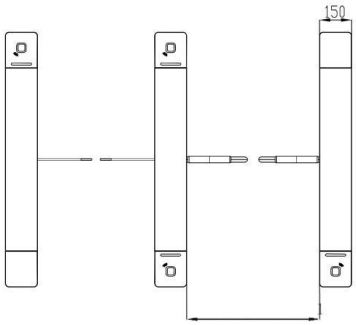

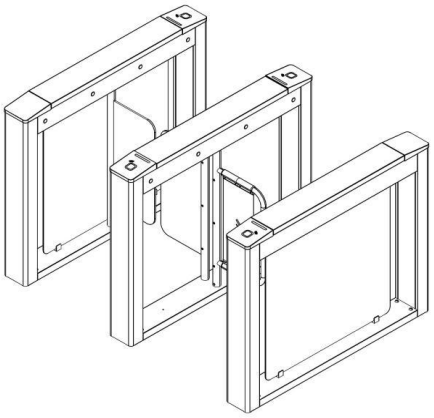

- Standard Passage Width: 600 mm
- Passage Width Range: 600–950 mm